Star Refined Technology

Webslte: www.SRT-RC.com
Mailbox: info@srt-rc.com
Sales: sales@srt-rc.com
Technical: technical@srt-rc.com

Star Refined Technology co.,Ltd
Address: 09F 0902,Jin Rong Building, Xiapu Avenue, Huizhou, Guangdong, China Sales office in China

Sales:86 +18129689516

SRT Standard Servo (BH9037)

The SRT Standard Servo provides 180° Limit angle range of motion and position control for your project. Great for animatronics and ideal scale applications .

KEY FEATURES

- Ideal for 1/10 on road and 1/8 off road scale applications, as well as large scale airplanes and jets
- incredible efficiency and low power consumption
- Titanium & Steel gears for precision and durability
- 0.16 / 416.6 oz-in @6.0V and 0.13 / 513.8oz-in @ 8.4V
- Standard dimension make it perfect for vehicles that can benefit from a high quality servo
- CNC Machined aluminum case for exceptional cooling
- HD 4096 Resolution
- 2 μsec Dead Band
- Superior Holding Torque
- 1-Year Limited Warranty

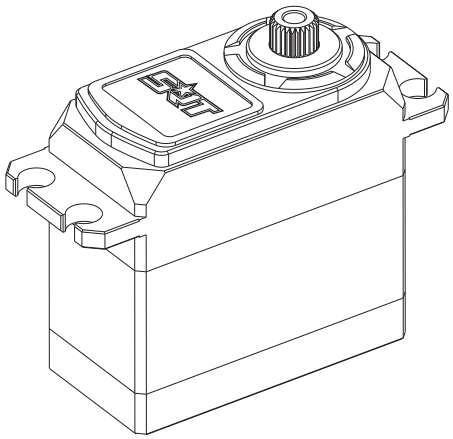

OVERVIEW

The latest generation of SRT servos provides you with the performance you need for any 1/10th to 1/8th scale vehicle application. are standard size servos for High-Voltage applications up to 8.4V, feature all metal case construction for the ultimate 1/8th scale performance. All these servos feature SRT innovations like the removable wire leads that allow for custom lead length and ease of maintenance and all metal servo mounting tabs to keep them in place through the most extreme conditions.

Power Requirement Notes

The manufacturer specifies 6.0-8.4VDC for this servo. However, we find that this servo is tolerant of a 9 V battery for very brief periods of time when there is no load, as used in some activities in the Stamps in Class series of tutorials. (Slight jittering may be observed when batteries are fresh; this does not cause damage). Do not use this servo with an unregulated wall-mount supply, or a regulated wall mount supply exceeding 8.4VDC.

Servo current draw can spike while under load. Be sure that your application's power supply and voltage regulator is prepared to supply adequate current for all servos used. Do not try to power this servo directly from a BASIC Stamp module's or any microcontroller’s Vdd or Vin pins; do not connect the servo's Vss line directly to the BASIC Stamp module's or any microcontroller’s Vss pin.

Copyright © SRT Inc.

Apply Environmental Condition

Storage Temperature Range: -20℃～60℃

Operating Temperature Range: -10℃～50℃

Operating Voltage Range: 6.0V~7.4V~8.4V

Standard Test Environment

Every characteristic of the inspect must be carried out under normal temperature and humidity, temperature 25±5℃ and relative humidity 65±10%, judge the characteristics according to this standard testing conditions.

Electrical Specification (Function of the Performance)

item	6.0V	7.4V	8.4V
Operating speed (at no load)	0.16 sec/60°	0.14 sec/60°	0.13 sec/60°
Running current at no load(Slow to Fast)	200 mA	300 mA	400 mA
Stall torque (at locked)	30.0 kg-cm	35.0 kg-cm	37.0 kg-cm
Stall current (at locked)3100 mA	3200 mA	3600 mA	3700 mA
Idle current (at stopped)	29 mA	35mA	37mA

Note: Item definition is average value when the servo running with no load

Mechanical Specification

Item	Standard
Materials of the gear	Titanium & Steel
Weight	80 ± 1g
Limit angle	180° ± 10°
Connector wire gauge	#28 AWG 0.08*60
Connector wire length	300 ± 5 mm
Horn gear spline	ψ5.8*25T
Horn type	Single, Double
Reduction ratio	1/402
Motor Type	Brushless Motor

Control Specification

Item	Standard
Control system	Pulse Width Modification
Amplifier type	333Hz Digital Controller
Operating travel	90° (1500→2000 μsec)
Neutral position	1500 μsec
Dead band width	2 μsec
Rotating direction	Clockwise (when1500→2000 μsec)
Pulse width range	800→2200 μsec
Maximum travel	Approx 125°(when800→2200 μsec)

Appearance Inspection

Appearance: No damage which affects functions allowed
Outline Drawing: Dimension see below
*mm

